Minnesota Department of Education

PUBLIC LIBRARY BUILDING ACCESSIBILITY SURVEY

2012 Edition

Created by

STATE LIBRARY SERVICES
Minnesota Department of Education
1500 Highway 36 West
Roseville, MN 55113
651-582-8791 (Voice)

MINNESOTA STATE COUNCIL ON DISABILITY
121 East 7th Place, Suite 107
Metro Square Building
St. Paul, MN 55101
651-296-6785 (Voice/TTY)
1-800-945-8913 (Voice/TTY)

BUILDING CODES AND STANDARDS
Minnesota Department of Labor and Industry
443 Lafayette Rd
St. Paul, Minnesota 55101
651-284-5877 (Voice)

TABLE OF CONTENTS

STATE LIBRARY SERVICES 1
PURPOSE OF THIS WORKBOOK 2
APPLICABLE LAWS 2
WHO BENEFITS 3
HOW TO USE THE WORKBOOK 3
WHERE TO GO FOR HELP 4
STATE AND FEDERAL BUILDING CODES 5
AUDITORIUM 6
CARPETING 9
CARREL 10
CORRIDOR 14
CURB RAMP 16
DOORWAY 17
DRINKING FOUNTAIN 19
DROP-OFF SITE 20
ELEVATOR 21
LIFT 22
MEETING ROOM 23
PARKING 24
RAMP 26
RESTROOM 27
SERVICE COUNTER 29
SHELVING, FURNITURE, AND EQUIPMENT 30
SIGNAGE 31
STAFF ROOM 33
STAIRS 34
TABLE 35
TELEPHONE, PUBLIC 36
WALKWAY 37
DIAGRAMS 38

STATE LIBRARY SERVICES

State Library Services, the Minnesota state library agency, is part of the Minnesota Department of Education. The state library agency provides consultant, advisory and guidance services to librarians, library boards, public officials, citizens and groups that are interested in libraries and library development. The staff administers the Minnesota program for public library development and multi-county, multi-type library cooperation with state funds appropriated for these purposes and other state grant programs. It is responsible for the federal Library Services and Technology Act program.

The Minnesota Braille and Talking Book Library, located in Faribault, is part of the state library agency.

Under Minnesota Statutes, section 134.45, the Commissioner of the Minnesota Department of Education, in consultation with the Minnesota State Council on Disability, approves matching grants to improve accessibility to public library facilities by removing architectural barriers from a building or site. State Library Services administers the grants on behalf of the Commissioner. Additional information about public library accessibility and improvement grants can be obtained from the state library agency website or contacting Bruce Pomerantz, Library Development Specialist, at 651-582-8890 or bruce.pomerantz@state.mn.us.

PURPOSE OF THIS WORKBOOK

This workbook will help you inventory your library's accessibility by individuals with disabilities. The Americans with Disabilities Act (ADA), signed into law by President George Bush in July 1990, requires all public government buildings to be compliant by January 25, 1995.

Several sections of this survey are ineligible for competitive state matching accessibility grants because they are classified as equipment or furniture. These sections are provided to raise awareness of all problem areas.

APPLICABLE LAWS

The ADA is divided into four major Titles that prohibit discrimination against any person with a disability in employment, state and local government services, public transportation, public accommodations, and telecommunications.

Title I: Employment

Employers may not discriminate against a person with a disability in hiring or promotion if the person is otherwise qualified for the job. Employers must provide "reasonable accommodation" to persons with disabilities, including job restructuring and modification of equipment.

Information on the Title I provisions can be obtained from the Equal Employment Opportunity Commission, 1801 L Street NW, Washington, D.C. 20507, phone 1-800-669-4000; TDD 1-800-669-6820 or the Minneapolis Area Office, Towle Building, 330 South Second Avenue Suite 430, Minneapolis, MN 55401-2224, phone: 612-335-4040; TDD: 1-800-669-6820.

Title II: Public Services and Transportation

Subtitle A prohibits state and local governments from discriminating against persons with disabilities. Subtitle B provides for accessibility to public transit buses, rail lines, and bus and train stations.

Information on the public transportation provisions can be obtained from the U.S. Department of Transportation, 400 Seventh Street SW, Washington, D.C. 20590, phone: 202-366-4000.

Title III: Public Accommodations

Persons with disabilities are to be provided accommodations and access equal to, or similar to, that available to the general public. The final rules implementing Title III of the Americans with Disabilities Act were published in the Federal Register of July 26, 1991. To obtain a copy, call the U.S. Department of Justice at 202-514-2000.

Questions on Titles II and III can be directed to the Civil Rights Division, Disabilities Rights Section-NYA, U.S. Department of Justice, 950 Pennsylvania Avenue NW, Washington, D.C. 20035. phone: 800-514-0301; TTD: 1-800-514-0383.

Technical information on the ADA accessibility provisions can be obtained from the United States Access Board, 1331 F Street, NW, Suite 1000, Washington, DC 20004, phone: 1-800-872-2253; Fax: 202- 272-0081; TTD: 1-800-983-2822.

Title IV: Telecommunications
Companies offering telephone service to the general public must offer telephone relay service to persons who use telecommunications devices for the deaf (TTDs) or similar devices.

Information on the Title IV provisions can be obtained from the Federal Communications Commission, 445 12th St. SW, Washington, D.C. 20554, phone: 1-888-225-5322; TTD: 1-888-835-5322.

WHO BENEFITS
In Minnesota, an estimated 10 percent of residents have some type of physical disability. At your library, these individuals might include the teacher who is blind, the mother who has multiple sclerosis, a child who uses a wheelchair, or an older visitor who uses a walker, or anyone with a temporary broken leg or arm.

A physical disability can affect each of us at any time, either directly or through friends and family. Providing accessibility to your library invites new potential customers with physical disabilities and also allows you to retain the customers you currently have. However, it is not only people with disabilities who benefit from accessible features; everyone benefits from a barrier-free environment. Library users carrying materials appreciate wider doors and hallways, automatic opening doors and large open spaces. Parents with small children will find unisex and wide accessible toilet stalls useful and convenient. Lever handles and easy operating controls benefit everyone.

HOW TO USE THE WORKBOOK
This workbook presents a checklist of the most common design elements and is not meant as a comprehensive list of requirements. Public Library Accessibility and Improvement grant applicants are responsible for full compliance. The checklist is meant to bring attention to issues that may need further evaluation.

Duplicate the sections as needed. If you have more than one specified area, such as bathrooms, elevators and doorways, indicate the location for purposes of identification.

Submit only the title page and the checklist if you are applying for a grant. Do not include the introductory text and diagrams.

The survey forms reflect the most stringent accessibility requirements of either the Minnesota State Building Code or the Americans with Disabilities Act Accessibility Guidelines (ADAAG) that existed at the time of the development of this survey tool. The Minnesota building code typically is more stringent than ADAAG and is the prevailing requirement. For this reason, this survey tool is specific to the State of Minnesota. A table on page 5 provides a comparison between the Minnesota State Building Code and ADAAG on issues related to libraries. It is not intended to be comprehensive, either on requirements or differences between the state building code and ADAAG. Contact your local building official or the Minnesota State Council on Disability if you have concerns regarding current requirements.

If you learn of any outdated information in the survey or if you have recommendations to improve this workbook, please contact State Library Services.

While much care has been taken to provide correct information, the workbook is an advisory publication regarding ADAAG and the Minnesota State Building Code. For official information, see the “Where to Go for Help” list below.

Questions with the word "*(Diagram)"* at the end indicate that Appendix 1 provides diagrams with measurements provided in inches in large type above a line and in centimeters in smaller type below the line. When a standard has a range within which to qualify, a preference is provided in parentheses. For additional diagrams go to the Access Board Diagram webpage (http://www.access-board.gov/adaag/html/figures/index.html) and the Department of Justice 2010 ADA Standards for Accessible Design publication.

Items marked with an asterisk (*) are recommended standards but are not required.

WHERE TO GO FOR HELP

The following are resources for evaluating buildings, interpreting rules and regulations and assisting in designing solutions:

Building Codes and Standards, Minnesota Department of Labor and Industry, 443 Lafayette Rd, St. Paul, Minnesota 55101, phone: 651-284-5877; TTY: 1-800-627-3529; fax: 651-284-5749.

United States Department of Justice Americans with Disability Act Home Page

State Library Services, Minnesota Department of Education, 1500 Highway 36 West, Roseville, MN 55113-4266, phone 651-582-8890; fax: 651-582-8752.

Minnesota State Council on Disability, 121 E. 7th Place, Suite 107, St. Paul, MN 55101. Voice and TTD1-800-945-8913.

CENTERS FOR INDEPENDENT LIVING

Freedom Resource Center for Independent Living
3505 8th Street South Suite 7
Moorhead, MN 56560
Phone: 218-236-0459

Independent Life Styles: A Center for Independent Living
709 West St. Germain Suite 200
St. Cloud MN 56301
Phone: 320-529-9000

Metro Center for Independent Living
1600 University Avenue West #16
St. Paul, MN 55104
Phone: 651-646-8342

Options
318 Third St. N.W.
East Grand Forks, MN 56721
Phone: 218-773-6100

Resources Center for Independent Living of Northeastern Minnesota
Messabi Mall Suite 11
Hibbing, MN 55746
Phone: 218-262-6675

Southeast Minnesota Center Independent Living
130 7th Street Northwest
Rochester, MN 55901
Phone: 507-285-1815

Southern Minnesota Independent Living Enterprises and Services Center for Independent Living
709 South Front St.
Mankato, MN 56001
Phone: 507-345-7139

Southwest Center for Independent Living
109 South Fifth St. Suite 700
Marshall, MN 56258
Phone: 507-532-2221

STATE AND FEDERAL BUILDING CODES

The table below provides a comparison of Minnesota Building Code 1341 and Americans with Disabilities Act Guidelines (ADAAG) Requirements

Note: The prevailing standard has the asterisk.

This table is not intended to be comprehensive, either on requirements or differences between the state building code and ADAAG.

Issue	Minnesota 1341	ADAAG
Slope of exterior route	*1:20	1:12
Width of exterior route	*48 inches	36 inches
Elevator in buildings with more than one story above or below the level of access	*Yes	If any story is 3000 square feet or more
Elevator to public mezzanine	Yes, if public facility	*Yes
Unisex toilet room required	*Where an aggregate of six or more male and female water closets are required	No
Floor space at water closet	*48 inches clear in front of water closet and 42 inches from centerline of water closet to nearest element	56 inches deep w/wall mounted water closet or 59 inches deep w/floor mounted water closet. Lavatory may be 18 inches from centerline of water closet
Alteration to toilet room	*Side transfer stall or unisex room required	Ambulatory stall may qualify as alternate
Vertical grab bar	*Yes	No
TTY telephone	*When public telephone is provided	When four or more public telephones are provided
Service counter	*Portion of main counter 36 inches high	Auxiliary counter allowed

AUDITORIUM (1 of 2) **Location: _____**

Number of wheel chair spaces provided.
_____

Are wheelchair spaces provided in accordance with the table below?
___ Yes ___ No

Auditorium Seating Capacity	Number of Required Wheelchair Spaces
4 to 25	1
26 to 50	2
51 to 300	4
301 to 500	6
501 to 5,000	6 plus 1 for each 150 between 501 and 5000
Over 5,000	6 plus 1 for each 200 over 5,000

Where two adjacent wheelchair spaces are provided, do the wheelchair seating spaces measure a minimum of 33 inches wide by 48 inches deep for a forward approach or 33 inches wide by 60 inches deep for a side approach? *(Diagram, p. 39)*
___ Yes ___ No

If a single wheel chair space is provided, does it measure a minimum of 36 inches wide by 48 inches deep for forward or 60 inches deep for a side approach?
___Yes ___ No

Is the slope of the wheelchair spaces no greater than 1:48 (2%)?
___ Yes ___ No

Is there at least one wheelchair seating area which provides a minimum of two wheelchair spaces?
___ Yes ___ No

Are the wheelchair seating areas designed so that companion seating is available next to the wheelchair seating?
___ Yes ___ No

Are wheelchair spaces integrated and dispersed throughout the auditorium?
___ Yes ___ No

Types of Listening Systems

Assistive listening systems are intended to augment standard public address and audio systems by providing signals which can be received directly by persons with special receivers or their own hearing aids and which eliminate or filter background noise. The type of Assistive listening system appropriate for a particular application depends on the characteristics of the setting, the nature of the program, and the intended audience. Magnetic induction loops, infra-red and radio frequency systems are types of listening systems which are appropriate for various applications.

AUDITORIUM (2 of 2)

Is there an assistive listening system provided?
___ Yes ___ No

Is there signage located in prominent locations notifying the public of the availability of the assistive listening system?
___ Yes ___ No

If there are raised or lowered areas such as stages, dressing rooms, locker rooms, etc., are they accessible by a ramp or lift?
___ Yes ___ No

Comments:

***BOOK DROP** **Location: _____**

If there is a book drop, is it positioned at a height between 44 and 48 inches so that it usable by someone in a wheelchair or by a library user who has difficulty lifting heavy objects?
___ Yes ___ No

Is the book drop on an accessible route?
___ Yes ___ No

Is there clear floor or pavement space?
___ Yes ___ No

Is the chute door operable with one hand without requiring tight grasping, pinching or twisting of the wrist?
___ Yes ___ No

Comments:

CARPETING **Location: _____**

Does the carpet or carpet tile have a level loop, textured loop, level cut pile, or level cut/uncut pile texture? *(Diagram, p. 39)*
___ Yes ___ No

Is the pile height a maximum of 1/2 inch (13 mm)? *(Note: Pile height includes the backing, cushion and pad.)*
___ Yes ___ No

Are exposed edges of carpet fastened to floor surfaces with trim on the entire length of exposed edges?
___ Yes ___ No

Is unbeveled trim a maximum height of ¼ inch?
___ Yes ___ No

OR

If trim is beveled, are changes in level between 1/4 inch high minimum and 1/2 inch high maximum with a slope not steeper than 1:2?
___ Yes ___ No

Comments:

CARREL **Location: _____**

Is shelving a maximum of 48 inches high? *(Diagram, p 39)*
___ Yes ___ No

Is the maximum depth for the 48 inch-high shelving 20 inches?
___ Yes ___ No

Is the reach depth between 20 inches and a maximum of 25 inches?
___ Yes ___ No

If the reach depth is more than 20 inches, is the reach range a maximum of 44 inches? *(Diagram, p. 39))*
___ Yes ___ No

***CHILDREN'S ENVIRONMENT (1 of 2)**

The guidelines in this section are optional but encouraged for areas that are predominantly used by children.

DRINKING FOUNTAIN FOR CHILDREN AGE 12 AND YOUNGER

Is the spout height no more than 30 inches above the floor?
___ Yes ___ No

Can drinking fountain be approached by an adjacent parallel route?
___ Yes ___ No

RESTROOM FOR CHILDREN AGE 12 AND YOUNGER

Is the height of the toilet seat between 11 inches and 17 inches above the floor?
___ Yes ___ No

Is the height of the horizontal grab bar between 18 inches and 27 inches above the floor?
___ Yes ___ No

Is the distance from the center line of the toilet to the side wall between 12 inches and 18 inches?
___ Yes ___ No

Is the toilet paper dispenser located below the horizontal grab bar and no less than one inch above the seat?
___ Yes ___ No

Are the flush valves for the toilet no more than 36 inches above the floor?
___ Yes ___ No

Is the rim of the sink no more than 31 inches above the floor? (ages 6-12)
___ Yes ___ No

For ages 5 and younger, rim height and knee clearance do not apply, but is a parallel approach provided adjacent to the sink?
___ Yes ___ No

Is the knee clearance at least 24 inches from the floor to the bottom of the apron? (ages 6-12)
___ Yes ___ No

SEATING, TABLES AND WORK SURFACES FOR CHILDREN AGE 12 AND YOUNGER

Are knee clearances at least 24 inches high?
___ Yes ___ No

AND

CHILDREN'S ENVIRONMENT (2 of 2)

At least 17 inches deep?
___ Yes ___ No
Are table top heights between 26 inches and 30 inches above the floor?
___ Yes ___ No

AND

At least 30 inches wide?
___ Yes ___ No

For ages 5 and younger, table top and knee clearances do not apply, but is a parallel approach provided adjacent to the table?
___ Yes ___ No

Comments:

***COMPUTER KEYBOARD** **Location: _____**

Is the computer equipment on an accessible route?
___ Yes ___ No

Are computer keyboards adjustable or are they at a height between 28 and 34 inches from the floor?
___ Yes ___ No

Is there a minimum of 30 inches by 48 inches of clear floor space to provide access to the keyboard?
___ Yes ___ No

Is knee clearance 27 inches high and 17 inches deep?
___ Yes ___ No

Comments:

CORRIDOR (1 of 2) **Location: _____**

If corridor serves an occupant load of 50 or more, is it a minimum of 44 inches wide?
___ Yes ___ No

If corridor serves an occupant load of less than 50, is it a minimum of 36 inches wide?
___ Yes ___ No

If the corridor is less than 5 feet wide, are there passing spaces at least 5 feet by 5 feet located at intervals not exceeding 200 feet? (Note: corridor intersections are considered passing spaces.)
___ Yes ___ No

Do all doorways along the corridor provide a 32 inch clear opening measured from the face of the open door to the latch side door stop?
___ Yes ___ No

AND

Is the door hardware either a lever handle or loop-style type which does not require tight grasping, pinching or twisting to operate?
___ Yes ___ No

AND

Is the force required to open the door no more than 5 pounds? (Preferred: 3.5)
___ Yes ___ No

Are all levels of the corridor floor which are more than 1/2 inch above the main floor accessible by ramp, lift or elevator?
___ Yes ___ No

Is informational signage provided at doors located on the latch side wall and mounted between 48 inches and 60 inches above the floor?
___ Yes ___ No

AND

Are characters, symbols and background of signs eggshell, matte or other non-glare finish?
___ Yes ___ No

AND

Do characters and symbols contrast in color with their background? (Preferred: 70% contrast)
___ Yes ___ No

Do signs indicating restrooms, room numbers and exits have both raised and Brailled characters?
___ Yes ___ No

CORRIDOR (2 of 2)

If there are counters along the corridor, is there a section of the counter at least 36 inches wide that is no more than 36 inches above the floor?
___ Yes ___ No

Do objects protruding from walls between 27 inches and 80 inches above the floor project no more than 4 inches from the wall? *(Diagram, p. 40)*
___ Yes ___ No

If alarms are required by code or otherwise provided, are both audible and visual signals provided?
___ Yes ___ No

Comments:

CURB RAMP **Location: _____**

Is the slope of the curb ramp a maximum of 1:12 (8.3%) measured in the direction of travel?
___ Yes ___ No (Diagram, p. 40)

Is the curb ramp a minimum of 36 inches wide, exclusive of the flared edges?
___ Yes ___ No

Is the transition from the curb ramp to the adjoining surface flush and free of abrupt changes?
___ Yes ___ No

Is there a landing three feet minimum in length provided at the top of the curb ramp, starting from the leading edge?
___ Yes ___ No

Is the slope of the flared sides a maximum of 1:10 (10%) if the sides are not traversed?
___ Yes ___ No

Is the slope of the surface immediately adjoining the curb ramp a maximum of 1:20 (5%)?
___ Yes ___ No

Is the slope of the flared sides a maximum of 1:10 (10%) if the sides are not traversed?
___ Yes ___ No

OR

If the sides are traversed, is the maximum slope of the flared sides 1:12 (8.3%)?
___ Yes ___ No

Is there color and texture contrast with adjoining pavements?
___ Yes ___ No

Is the surface of the curb ramp firm, stable, and slip-resistant?
___ Yes ___ No

Are there curb ramps in the vicinity leading to the library?
___ Yes ___ No

Comments:

DOORWAY (1 of 2) **Location: _____**

With the door in a 90-degree open position, is there a minimum of 32 inches of clear space from the face of the door to the latch side door stop? (Exception: doors not requiring passage, such as shallow closets, may have clear openings of 20 inches minimum.) *(Diagram, pp. 40-41)*
__ Yes ___ No

If doorway has two independently operated door leaves, does at least one leaf provide 32-inch clear space?
___ Yes ___ No

If there are two sets of doors in a series, as in a vestibule, is there a minimum distance between the doors of four feet plus the width of the in-swinging door? *(Diagram, p. 40))*
__ Yes ___ No

Is the threshold no more than 1/2 inch in height for other doors?
___ Yes ___ No

Is the door hardware operable by a single effort with one hand not requiring tight grasping, pinching or twisting of the wrist?
___ Yes ___ No

Is the door hardware either a lever handle or loop-style type?
___ Yes ___ No

Is the door hardware mounted no more than 48 inches above the floor?
___ Yes ___ No

For interior doors, is the force required to open the door no more than five pounds? (Preferred: 3.5 pounds)(
___ Yes ___ No

Is there a minimum of 18 inches of clear space on the latch side from the pull side of the door? (Exception: doors with automatic or automated openers.)
___ Yes ___ No

If the door has a latch and closer, is there a minimum of 12 inches of clear space on the latch side from the push side of the door? (Exception: doors with panic hardware or an automatic or power-assisted door opener.)
___ Yes ___ No

If the door has an automatic push button control at an exterior location, does the button have a minimum dimension of 3 inches? (Preferred: 3 inches by 3 inches if rectangular or comparable if round)
___ Yes ___ No

AND

Is the push button control mounted between 30 inches and 36 inches above the floor?
___ Yes ___ No

DOORWAY (2 of 2)

AND

Is a clear floor space provided for a parallel approach centered on the push button?
___ Yes ___ No

Comments:

DRINKING FOUNTAIN **Location: _____**

See page 6 for drinking fountains used primarily by children.

Is there a clear floor space of at least 30 inches by 48 inches adjacent to the drinking fountain? *(Diagram, P. 42))*
___ Yes ____ No

Is the spout mounted no more than 36 inches above the floor?
___ Yes ____ No

Is the spout mounted at the front of the unit?
___ Yes ___ No

Is the water flow at least 4 inches high in a trajectory parallel or nearly parallel to the front of the unit?
___ Yes ___ No

Is the operating control mounted at the front of the unit or on the side near the front edge?
___ Yes ___ No

If wall-mounted, are there at least 27 inches of knee clearance from the floor?
___ Yes ___ No

Do at least 50 percent of the drinking fountains per floor comply with questions 1-6 above?
___ Yes ___ No

Do drinking fountains *not* complying with questions 1-6 above have a spout height between 38 inches and 43 inches above the floor?
___Yes ___No

If there is only one drinking fountain on the floor, does it have both a high and a low spout?
___ Yes ___ No

Comments:

DROP-OFF SITE **Location: _____**

Does the drop-off area provide an access aisle 5 feet wide by 20 feet long adjacent and parallel to the vehicle pull-up space? *(Diagram, p. 42)*
___ Yes ___ No

Is the vehicle pull-up space no less than 96 inches wide and no less than 20 feet long?
___ Yes ___ No

Does the drop-off area provide a minimum clear height of at least 114 inches at the space and along the vehicular route leading to the space?
___ Yes ___ No

Is the parking area and access aisle a firm, stable, slip-resistant surface with a slope of no more than 1:48 (2%) in all directions?
___ Yes ___ No

Is the access aisle a part of the accessible route leading to the building entrance?
___ Yes ___ No

Are curb ramps provided along the accessible route where necessary? (i.e., along the accessible route from parking drop-off or sidewalk.)
___ Yes ___ No

Is the drop-off area located as close as possible to an accessible entrance?
___ Yes ___ No

Comments:

ELEVATOR **Location: _____**

Are the hall call buttons located a maximum 48 inches above the floor?
___ Yes ___ No

Are visual and audible signals provided to indicate when the elevator has arrived?
___ Yes ___ No

Do newly installed elevators have the correct dimensions? (Existing elevators are excepted.) *(Diagram, p. 43)*
___ Yes ___ No

Does the audible signal sound once for the up direction and twice for the down direction?
___ Yes ___ No

Are the car control buttons a maximum of 54 inches above the floor for a side approach or 48 inches above the floor for a front approach?
___ Yes ___ No

Are call and control buttons a minimum of 3/4 inch in diameter?
___ Yes ___ No

Are there raised and Brailled numbers and/or characters to the left of each control button within the elevator?
___ Yes ___ No

Do the hoistway entrances have raised and brailled floor designations on both jambs, located between 48 and 60 inches above the floor?
___ Yes ___ No

Do the minimum inside car dimensions comply with the diagrams?
___ Yes ___ No

Is the emergency communication device located no more than 48 inches above the floor?
___ Yes ___ No

Does the emergency communication device provide both audible and visual communication?
___ Yes ___ No

Comments:

LIFT **Location: _____**

Does the lift have a maximum vertical travel of 14 feet? *(Diagram, p. 44)*
___ Yes ___ No

Does the lift provide independent entry, operation and exit such that a person can operate the lift without assistance?
___ Yes ___ No

Is the size of the platform at least 32 inches wide by 48 inches long?
___ Yes ___ No

Do operating controls require no more than 5 pounds of force to activate?
___ Yes ___ No

Are call stations on an accessible route?
___ Yes ___ No

Do call stations have clear floor space of 30 inches by 48 inches?
___ Yes ___ No

Are call station and operating buttons located 48 inches maximum above the floor?
___ Yes ___ No

Comments:

MEETING ROOM **Location: _____**

Is a minimum of 5 percent of each type of seating, tables or carrels in the room available for those with physical disabilities?
___ Yes ___ No

Is there an access aisle at least 36 inches wide?
___ Yes ___ No

Where a section serves as a major component of the emergency evacuation path of travel, the minimum width is 44 inches. The local fire marshal will advise if an area is considered a major component of the emergency evacuation.

Is there an assistive listening system provided?
___ Yes ___ No

Types of Listening Systems

Assistive listening systems are intended to augment standard public address and audio systems by providing signals which can be received directly by persons with special receivers or their own hearing aids and which eliminate or filter background noise. The type of Assistive listening system appropriate for a particular application depends on the characteristics of the setting, the nature of the program, and the intended audience. Magnetic induction loops, infra-red and radio frequency systems are types of listening systems which are appropriate for various applications.

Is there a mix of chairs having arm rests and casters?
___ Yes ___ No

Note: If there are tables, see Tables section for requirements

Comments:

PARKING (1 of 2) **Location: _____**

PARKING SPACE TABLE

Van accessible spaces are included in the count of accessible spaces required.

TOTAL PARKING SPACES	ACCESSIBLE SPACES REQUIRED	VAN ACCESSIBLE SPACES REQUIRED
1 to 25	1	1
26 to 50	2	1
51 to 75	3	1
76 to 100	4	1
101 to 150	5	1
151 to 200	6	1
201 to 300	7	2
301 to 400	8	2
401 to 500	9	2
501 to 1,000	2% of Total	1 in every 6 accessible spaces
1,001 and over	20 plus 1 for each additional 100	1 in every 6 accessible spaces

Number of parking spaces provided.

_____

Are there enough accessible spaces as required in the table above?
___ Yes ___ No

Do the accessible spaces include van accessible spaces as required in table above?
___ Yes ___ No

Are car parking spaces 96 inches wide minimum and van parking spaces 132 inches wide minimum? EXCEPTION: Van parking spaces shall be permitted to be 96 inches wide minimum where the access aisle is 96 inches wide minimum. *(Diagram, p. 44)*
___ Yes ___ No

Does each accessible parking space have an adjacent 8-feet-wide access aisle?
___ Yes ___ No

Does the van accessible space have a minimum clear height of 98 inches at the space and along the vehicular route leading to the space?
___ Yes ___ No

Are the access aisles a part of the accessible route leading to the building entrance?
___ Yes ___ No

Is the accessible aisle level with the parking space?
___ Yes ___ No

PARKING (2 of 2)

Are curb ramps provided along the accessible route to doorway(s) where necessary, such as along the route from parking, drop-off, or sidewalk?
___ Yes ___ No

Is each accessible space identified with a sign displaying the international symbol of accessibility in white on a blue background and indicating that there is a maximum fine of $200 for violation?
___ Yes ___ No

Does the van space have a sign indicating "van accessible?" (Required only when not all spaces have a 98 inch height clearance)
___ Yes ___ No

Is the sign centered at the head end of the space less than 8 feet from the space?
___ Yes ___ No

OR

If parallel parking, is the sign located on the side of the space at the head end?
___ Yes ___ No

Is the bottom edge of the sign between 60 inches and 66 inches above the surface of the parking space?
___ Yes ___ No

Are access aisles marked as “no parking”?
___ Yes ___ No

Are the designated spaces located as close as possible to an accessible entrance?
___ Yes ___ No

For facilities with more than one accessible entrance, are the designated parking spaces dispersed among the various accessible entrances?
___ Yes ___ No

Is the parking area and access aisle a firm, stable, slip-resistant surface with a slope of no more than 1:48 (2%) in all directions?
___ Yes ___ No

Comments:

RAMP **Location: _____**

Any part of an accessible route with a slope greater than 1:20 is defined as a ramp. Ramps must be enclosed for protection against rain and snow. The maximum slope for a ramp is 1:12. Sloped routes exposed to rain and snow are defined as walkways.

Is the ramp a minimum of 36 inches wide, measured between handrails?
___ Yes ___ No

Is the least possible slope used?
___ Yes ___ No

Is the maximum slope 1:12?
___ Yes ___ No

Is the cross slope no greater than 1:48 (2%)?
___ Yes ___ No

Is the surface of the ramp firm, stable and slip-resistant?
___ Yes ___ No

Is there a 5-foot long landing, measured in the direction of the ramp, at the top and bottom of the ramp?
___ Yes ___ No

If the total rise exceeds 30 inches, is there a 5-foot intermediate landing located such that no ramp segment exceeds 30 inches in rise?
___ Yes ___ No

If the ramp changes direction at the landing, is the landing at least 5 feet by 5 feet?
___ Yes ___ No

If the total rise is greater than 6 inches, are there handrails provided on both sides of the ramp?
___ Yes ___ No

Are the handrails mounted between 34 inches and 38 inches above the ramp surface?
___ Yes ___ No *(Diagram, p. 44)*

Is the space between the handrail and the wall a minimum of 1½ inches?
___ Yes ___ No

Do handrails extend horizontally 12 inches beyond the top and bottom of the ramp?
___ Yes ___ No

Are the ends of handrails rounded or returned to wall, floor or post?
___ Yes ___ No

Do edges of ramps and landings with drop-offs have curbs, walls or railings? (Note: curbs must be at least 4 inches high.)
___ Yes ___ No

Comment:

RESTROOM (1 of 2) **Location: _____**

See page 11 for restrooms used primarily by children.

Type: ___ Male ___ Female ___ Unisex/Family

With entry door in a 90 degree open position, is there a minimum of 32 inches of clear space from face of the door to the latch side door stop? *(Diagrams, p. 44)*
___ Yes ___ No

If there are two sets of doors in a series, as in a vestibule, is there a minimum distance between the doors of 4 feet plus the width of the in-swinging door?
___ Yes ___ No

Is the accessible toilet bowl centered between 16 inches and 18 inches from a side wall?
___ Yes ___ No

Is the width of the toilet area at least 5 feet, measured from the wall adjacent to the toilet? *(Diagram)*
___ Yes ___ No

Does the toilet area have a minimum of 48 inches of clear space from the front of the toilet bowl to the stall/room wall?
__ Yes ___ No

OR

Is the depth of the toilet area a minimum of 78 inches measured from the wall behind the toilet?
___Yes ___No

Is the flush valve located on the wide side of the toilet area?
___ Yes ___ No

If the door swings into the room or stall, is there a 30-inch by 48-inch clear floor space within the room that is clear of the swing of the door?
___Yes ___ No

Does the stall door have a minimum clear opening of 32 inches?
___ Yes ___ No

Is the stall/room door-locking hardware easy to operate, requiring no tight grasping, pinching or twisting?
___ Yes ___ No

If there are 6 or more toilet stalls in the room, is there an ambulatory stall measuring 36 inches wide provided in addition to the standard stall?
___ Yes ___ No

Are both horizontal and vertical grab bars provided as shown in diagrams?
___ Yes ___ No

RESTROOM (2 of 2)

Is the toilet paper dispenser mounted below the horizontal grab bar as shown in diagram?
___ Yes ___ No

Is the urinal mounted with the rim no more than 17 inches above the floor? (Plumbing permitting, 11 to 14 inches is preferred to accommodate children and males with urine leg bags.)
___ Yes ___ No

If there is a lower urinal or floor-mounted urinal, does the urinal have an elongated bowl?
___ Yes ___ No *(Diagram, p. 45)*

Is the rim of the sink a maximum height of 34 inches above the floor?
___ Yes ___ No

Is there a minimum of 27 inches of knee clearance from the floor to the bottom of the apron or counter?
___ Yes ___ No

Do the faucets have lever handles, operable with one hand and not requiring tight grasping, pinching or twisting of the wrist or are they electronically controlled? (Self-closing faucets which require both reaching forward and pushing down to activate are not allowed.)
___ Yes ___ No

Is the plumbing insulated or otherwise covered so that there are no exposed sharp or abrasive edges?
___ Yes ___ No

Is there a clear floor space 30 inches wide by 48 inches long in front of the sink?
___ Yes ___ No

Is the mirror mounted no higher than 40 inches to the bottom reflective edge?
___ Yes ___ No

Is there at least one of each type of accessory, (e.g., soap dispenser, towel dispenser, etc.), mounted such that the operating mechanism is no more than 48 inches above the floor?
___ Yes ___ No

Does each accessible fixture and accessory have a clear floor space 30 inches wide by 48 inches long in front of or adjacent to the fixture or accessory?
___ Yes ___ No

Does the toilet room have adequate space to allow a wheelchair to turn 180 degrees?
__ Yes ___ No

If there is an infant changing table, is it positioned a maximum of 34 inches above the floor?
___ Yes ___No

If there is a unisex bathroom, is it large enough to accommodate an assistant or is there a policy to allow for an assistant of the opposite sex in gender specific bathrooms?
___ Yes ___No

Comments:

SERVICE COUNTER **Location: _____**

An accessible counter has a portion at least 36 inches wide which is no more than 36 inches above the floor.

Is at least one of each type of service counter accessible?
___ Yes ___ No

Are accessible counters dispersed throughout the facility?
___ Yes ___ No

Are the accessible counters located on accessible routes?
___ Yes ___ No

Is the clear aisle width at least 36 inches?
___ Yes ___ No

Comments:

SHELVING, FURNITURE, AND EQUIPMENT **Location: _____**

Is there a minimum clear space of 36 inches between furniture and equipment for passage?
___ Yes ___ No

Where the aisle between items serves as a major component of the emergency evacuation route, the minimum clear width is 44 inches. The local fire marshal advises if an aisle is considered a major component of the emergency evacuation. (Diagram, p. 45)

Are magazine and other literature displays located within 18 inches to 48 inches above the floor?
___ Yes ___ No

When magazines and other displays are higher than 48 inches, is there a policy and staff ability to provide assistance to the individual
___ Yes ___ No

SIGNAGE (1 of 2) **Location: _____**

Regulations require signage for each rest room, rooms identified with numbers or names, and exit stairways. It is recommended that any signage for the sighted also be legible to people who are blind or visually impaired.

VISUAL CHARACTER HEIGHT

Height Above Floor to Baseline of Characters	Horizontal Viewing Distance	Minimum Character Heights
40 inches to less than or equal to 70 inches	Less than 6 feet	5/8 inches
40 inches to less than or equal to 70 inches	6 feet and greater	5/8 inch plus 1/8 inch per foot of viewing distance above 6 feet
Greater than 70 inches to less than or equal to 120 inches	Less than 15 feet	2 inches
Greater than 70 inches to less than or equal to 120 inches	15 feet and greater	2 inches plus 1/8 inch per foot of viewing distance about 15 feet
Greater than 120 inches	Less than 21 feet	3 inches
Greater than 120 inches	21 feet and greater	3 inches plus 1/8 inch per foot of viewing distance above 21 feet

Do letters and numbers on signs comply with the character height requirements based on mounting height and viewing distance as provided in the table?
___ Yes ___ No

Are the characters and backgrounds of signs eggshell, matte, or other non-glare finish?
___ Yes ___ No

Do the characters and symbols contrast with their background, either light characters on a dark background or dark characters on a light background?
___ Yes ___ No

Where permanent identification is provided for rooms and spaces, are signs installed on the wall adjacent to the latch side of the door?
___ Yes ___ No

Where there is no wall space to the latch side of the door, including at double leaf doors, are signs placed on the nearest adjacent wall?
___ Yes ___ No

Is the mounting height between 48 inches and 60 inches (1525 mm) above the finished floor measured to the baseline of the characters?
___ Yes ___ No

SIGNAGE (2 of 2)

Is the center line of the sign at least 9 inches from the latch side of the door?
___ Yes ___ No

Are pictograms accompanied by the equivalent written descriptions placed directly below them?
___ Yes ___ No

Is the border dimension of the pictogram 6 inches (152 mm) minimum in height?
___ Yes ___ No

Are telephones required to have a volume control identified by a sign containing a depiction of a telephone handset with radiating sound waves?
___ Yes ___ No

If text telephones (TTYs) are required are they identified by the international TTY symbol?
___ Yes ___ No

If the library has a public text telephone (TTY), does directional signage indicate the location of the nearest text telephone?
___ Yes ___ No

Is the directional signage placed adjacent to all banks of telephones which do not contain a text telephone (TTY)?
___ Yes ___ No

If the library has no bank of telephones, is the directional signage that includes the international TTY symbol at the entrance(e.g., in a building directory)?
___ Yes ___ No

If there is an assembly area with permanently installed assistive listening systems, is the availability of such a system identified with signage that includes the international symbol of access for hearing loss?
___ Yes ___ No

If signage is suspended from ceiling, is there 80 inches (2030 mm) minimum clear head room?
___ Yes ___ No

Comments:

STAFF ROOM **Location: _____**

Is the rim of the sink a maximum of 34 inches above the floor?
___ Yes ___ No

Is there a clear floor space provided for a parallel approach to the sink? *(Diagram, p. 45)*
___ Yes ___ No

Do the faucets have lever handles operable with one hand and not requiring tight grasping, pinching or twisting of the wrist, or are they electronically controlled?
___ Yes ___ No

Are the vending machine controls located no more than 48 inches above the floor?
___ Yes ___ No

Are the vending machine controls easy to operate requiring no tight grasping, pinching or twisting of the wrist?
___ Yes ___ No

Are accessories and condiments located within the reach ranges shown in the diagrams?
___ Yes ___ No

Are at least 5% of the tabletop heights between 28 inches and 34 inches above the floor? (Preferred: 30 inch maximum)
___ Yes ___ No

Do the same tables have a minimum knee clearance of 27 inches above the floor? (Preferred: 29 inches)
___ Yes ___ No

Does the knee clearance extend at least 17 inches beneath the table? (Preferred: 24 inch minimum)
__ Yes ___ No

Is the knee clearance at least 30 inches in width?
___ Yes ___ No

Comments:

STAIRS **Location: _____**

These rules apply when there is no ramp or elevator

Are riser heights and tread widths uniform throughout the entire stair run?
___ Yes ___ No

Is the tread at least 11 inches in depth? *(Diagram, p. 46)*
___ Yes ___ No

Are risers closed with a maximum nosing of 1½ inches?
___ Yes ___ No

Are undersides of nosings curved so that there are no abrupt edges or lips? *(Diagram, p. 46*
___ Yes ___ No

Are handrails provided on both sides of the stairway? (On switchback steps, inside handrails shall be continuous.)
___ Yes ___ No

Is the space between the inside edge of the railing and the wall a minimum of 1½ inches?
___ Yes ___ No

Are handrails mounted between 34 inches and 38 inches above the stair nosing?
___ Yes ___ No

Do handrails extend horizontally 12 inches beyond the top riser? *(Diagram, p 46)*
___ Yes ___ No

Do bottom handrails continue on slope a distance equal to the width of one tread past bottom riser?
___ Yes ___ No

Are the ends of handrails rounded or returned to wall, floor or post?
___ Yes ___ No

Comments:

TABLE **Location: _____**

Is tabletop height between 28 inches and 34 inches above the floor? (Preferred: 30 inch maximum) *(Diagram, p 47)*
___ Yes ___ No

Does the table have a minimum knee clearance of 27 inches above the floor?(Preferred: 29 inches)
___ Yes ___ No

Does the knee clearance extend at least 17 inches beneath the table? (Preferred: 24 inch minimum)
___ Yes ___ No

Is the knee clearance at least 30 inches in width?
___ Yes ___ No

Is a minimum of 5 percent of each type of fixed seating, tables or carrels in compliance with questions 1-4 above?
___ Yes ___ No

Comments:

TELEPHONE, PUBLIC **Location: _____**

Is there a clear floor space of at least 30 inches by 48 inches adjacent to the telephone?
___ Yes ___ No

Are the operating controls located no more than 48 inches above the floor?
___ Yes ___ No

Are there telephones equipped with a hearing aid compatible coil?
___ Yes ___ No

Are the telephone controls push button type?
___ Yes ___ No

Is the cord from the telephone to the handset at least 29 inches long?
___ Yes ___ No

Is a fixed or portable text telephone (TTY) provided?
___ Yes ___ No

On floors with single telephone units, do telephones on each floor comply with the requirements above?
___ Yes ___ No

On floors with two or more banks of telephones provided, does at least one phone per bank comply with the requirements above?
___ Yes ___ No

Do the telephone locations not meeting the above requirements have directional signage indicating the location of the nearest such device?
___ Yes ___ No

Do all telephones have volume control?
___ Yes ___ No

Comments:

WALKWAY **Location: _____**

Walkways are paths of travel outside a building, exposed to rain and snow. Inclined paths of travel exposed to rain and snow are considered walkways. Inclined walkways can have a maximum slope of 1:20.

Is the walkway at least 48 inches wide?
___ Yes ___ No

Is the least possible slope used?
___ Yes ___ No

Is the walkway sloped a maximum of 1:20 in the direction of travel?
___ Yes ___ No

Is the cross slope a maximum of 1:48 (2%)?
___ Yes ___ No

Does the walkway have a firm, stable, slip-resistant surface?
___ Yes ___ No

Do all changes in level between 1/4 inch and 1/2 inch in height have beveled edges? *(Changes greater than 1/2 inch are not allowed.) (Diagram, page 47))*
___ Yes ___ No

Are curb ramps provided along the accessible route where necessary? (i.e. along the accessible route from parking, drop-off, or sidewalk)
___ Yes ___ No

If gratings are located within the walkway, do they do they have spaces no greater than 1/2 inch wide with the long dimension perpendicular to the direction of travel? *(Diagram, page 47))*
__ Yes ___ No

Comments:

APPENDIX I

DIAGRAMS

Auditorium Seating

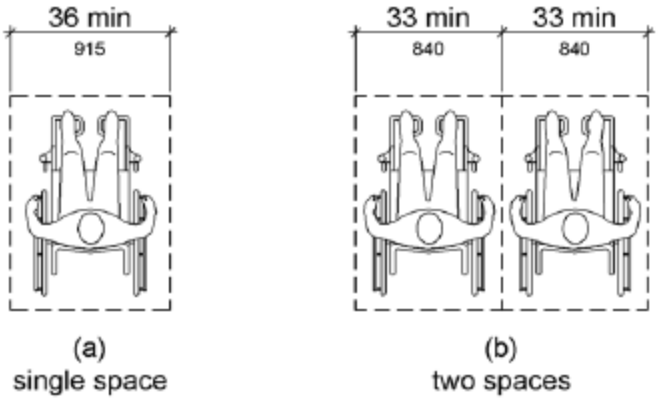

Carpeting

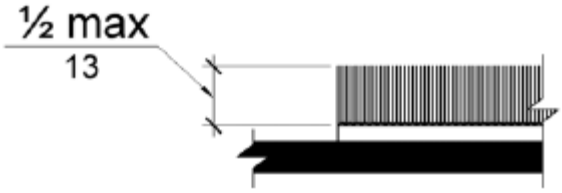

Carrel

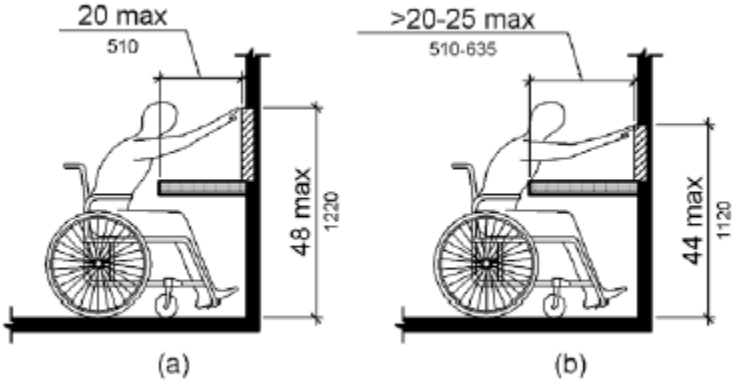

Corridor

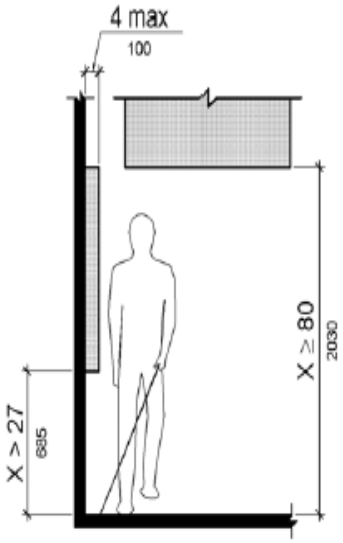

Curb Ramp

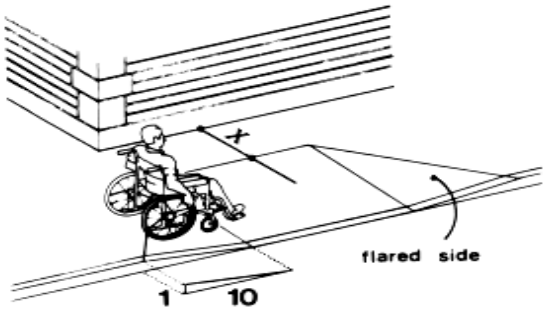

X is a minimum three feet from the beginning of the slope.

Doorway

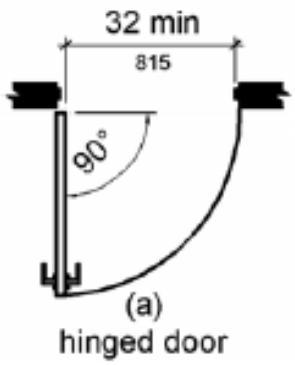

Doorway

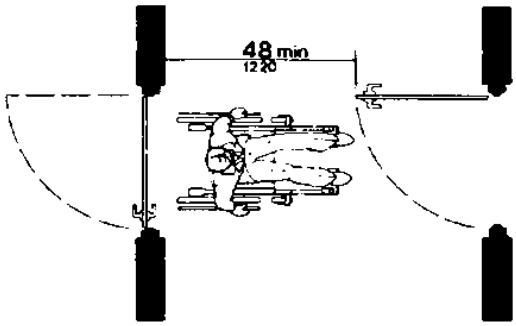

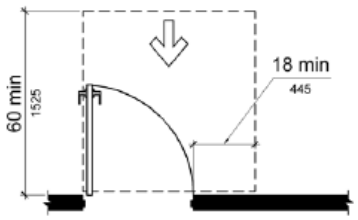

(a)
front approach, pull side

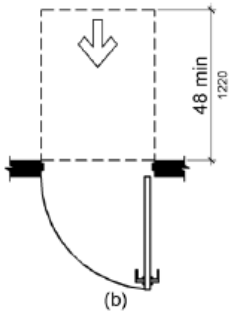

(b)
front approach, push side

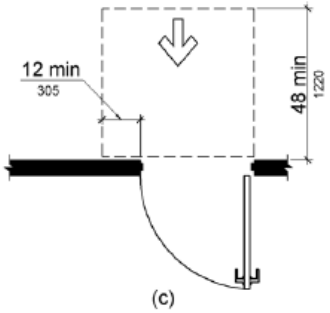

(c)
front approach, push side, door provided with both closer and latch

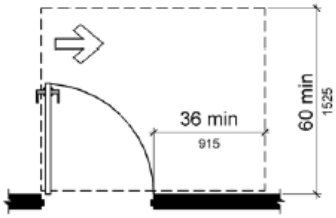

(d)
hinge approach, pull side

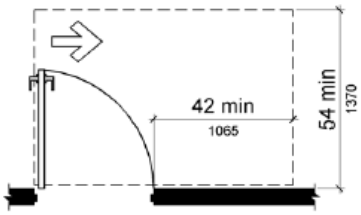

(e)
hinge approach, pull side

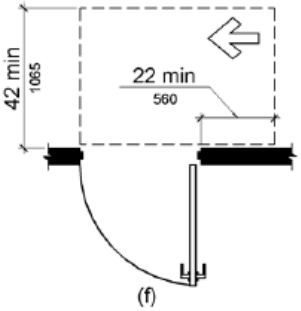

(f)
hinge approach, push side

Adult Drinking Fountain

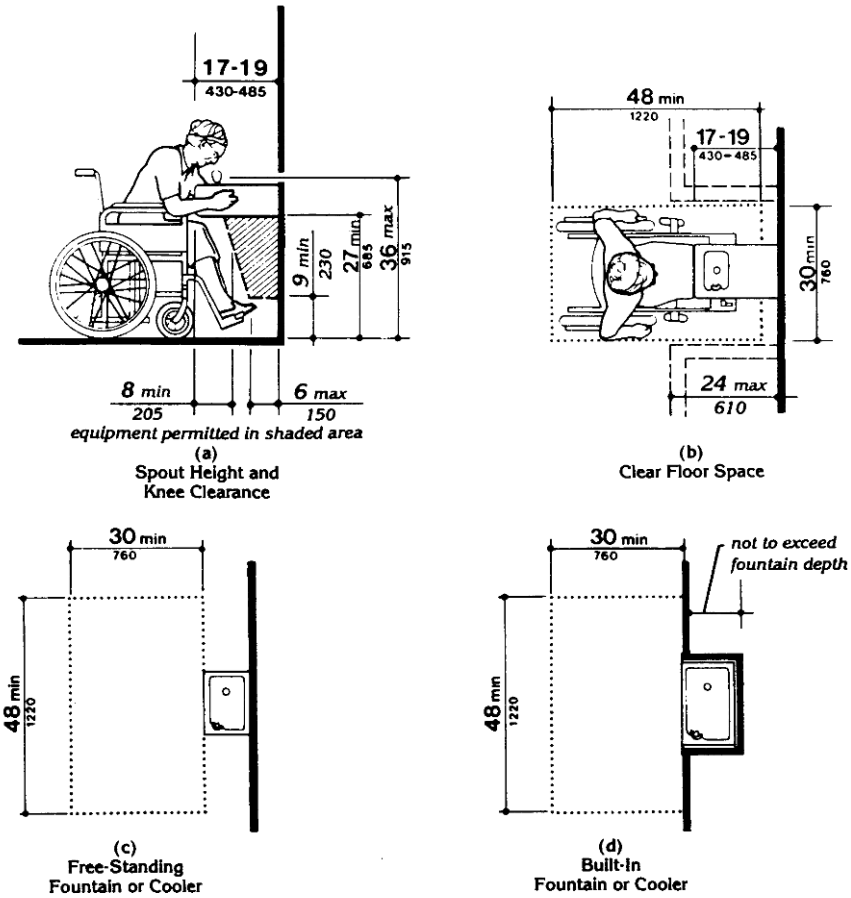

Drop-off Site

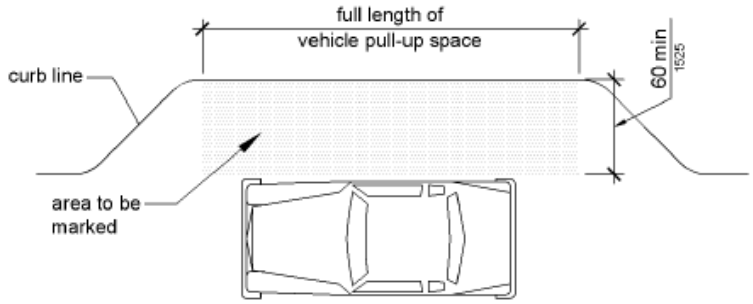

Elevator

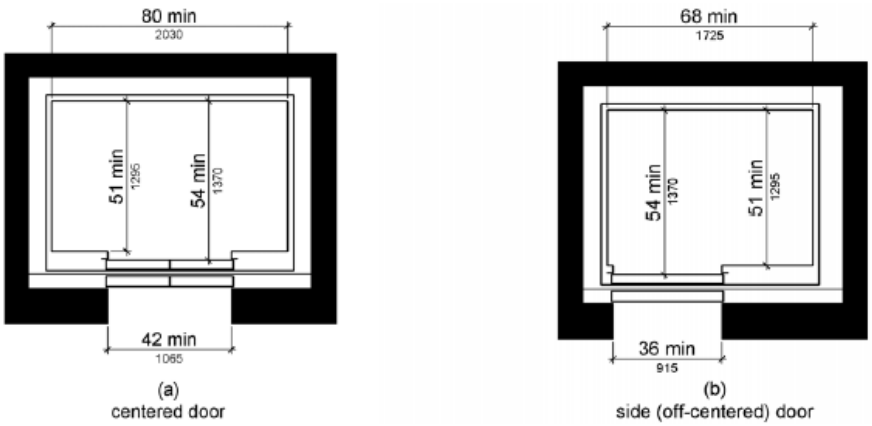

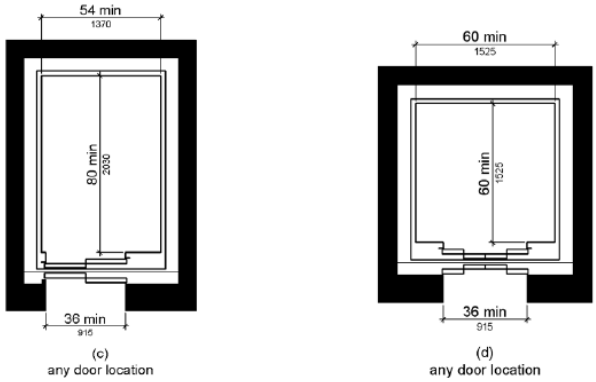

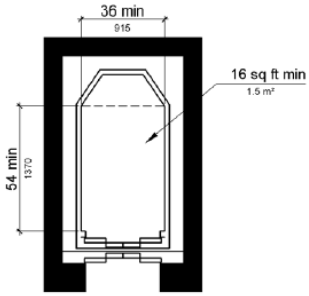

(e)
Exception
existing elevator car configuration

Lift

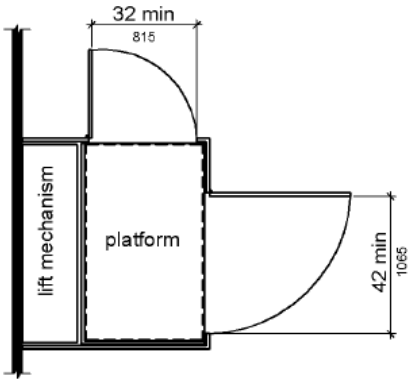

Car and Van Parking

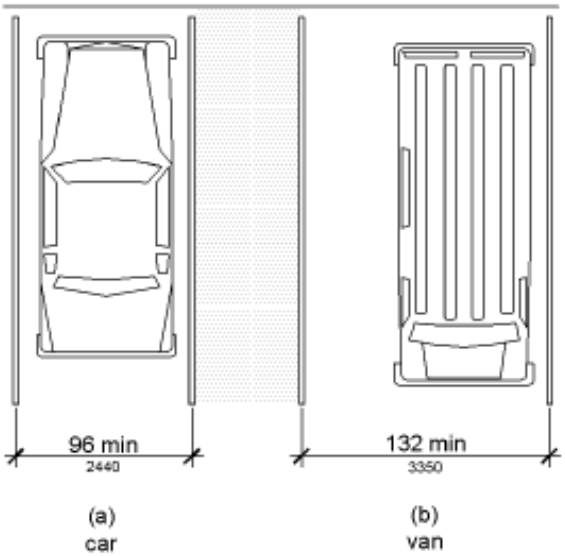

Ramp

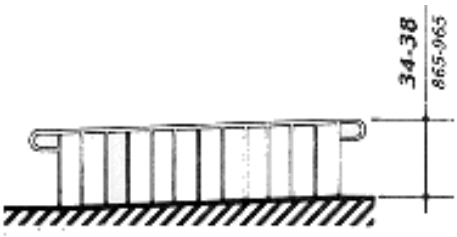

Restroom

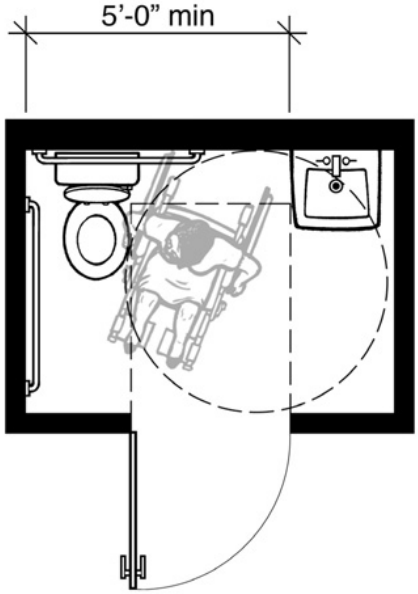
5'-0" min

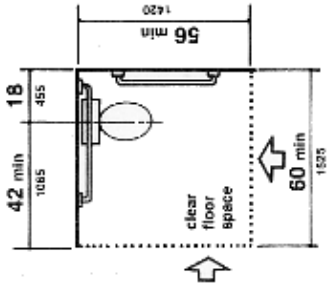
56 min
1420
18
455
42 min
1065
clear
floor
space
60 min
1525

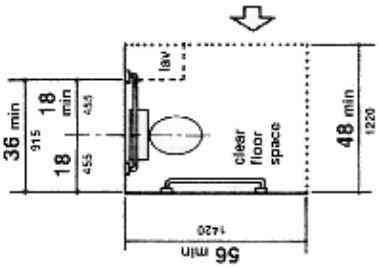
56 min
1420
36 min
915
18
455
18
min
455
lav
clear
floor
space
48 min
1220

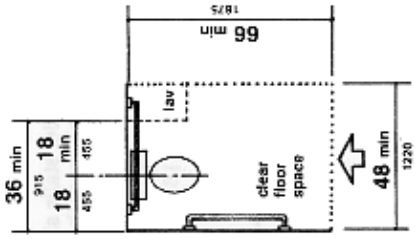
66 min
1675
36 min
915
18
455
18
min
455
lav
clear
floor
space
48 min
1220

Restroom

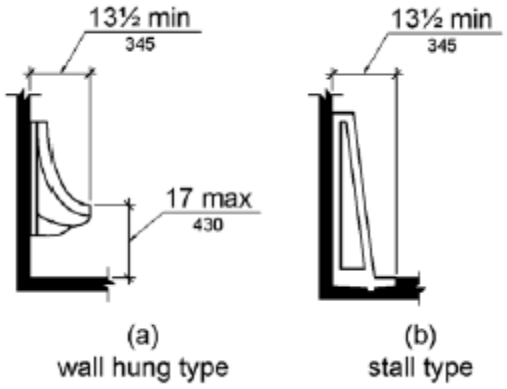

Shelving and Emergency Exit Corridor

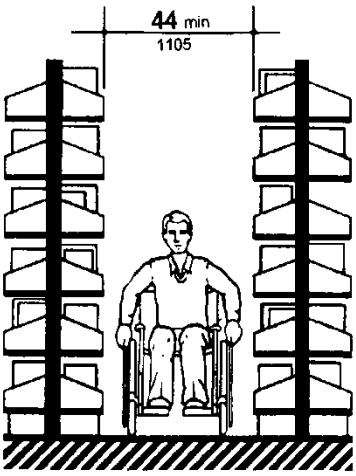

Staff Room

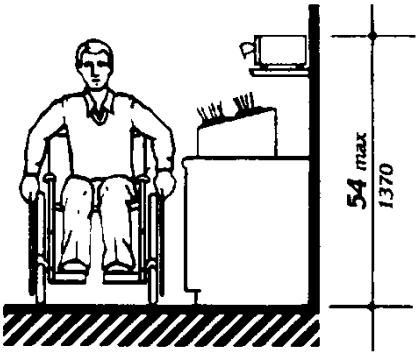

Stairs

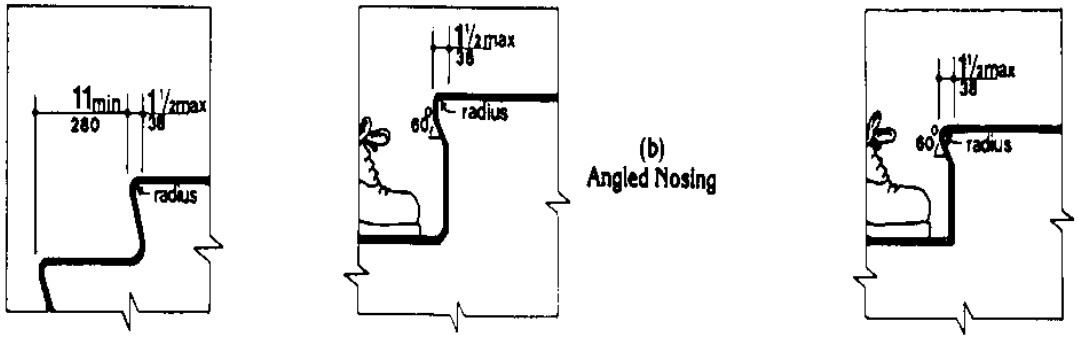

(a)
Flush Riser

(c)
Rounded Nosing

Fig. 18
Usable Tread Width and Examples of Acceptable Nosings

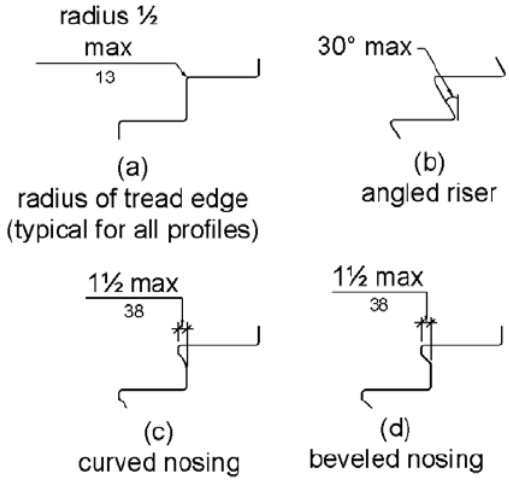

(a)
radius of tread edge
(typical for all profiles)

(b)
angled riser

(c)
curved nosing

(d)
beveled nosing

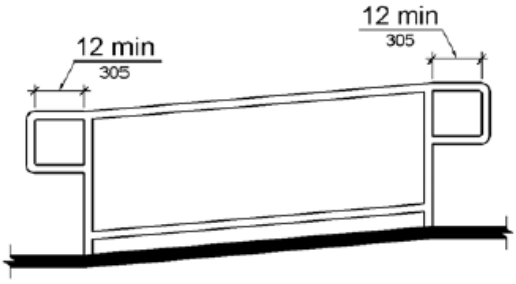

Table

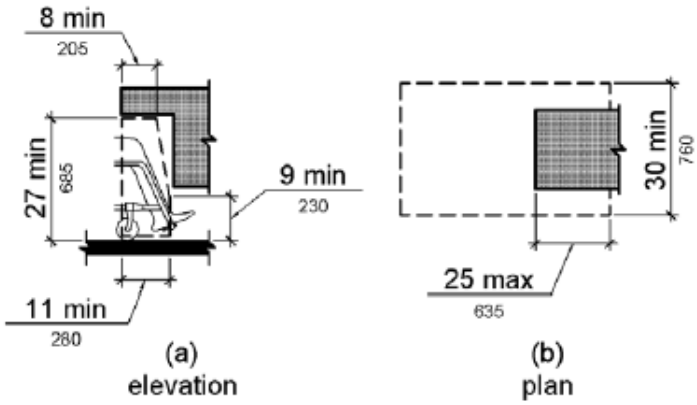

Walkway

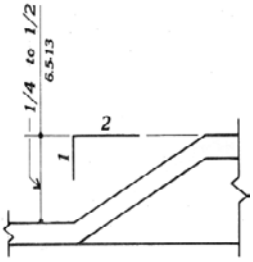
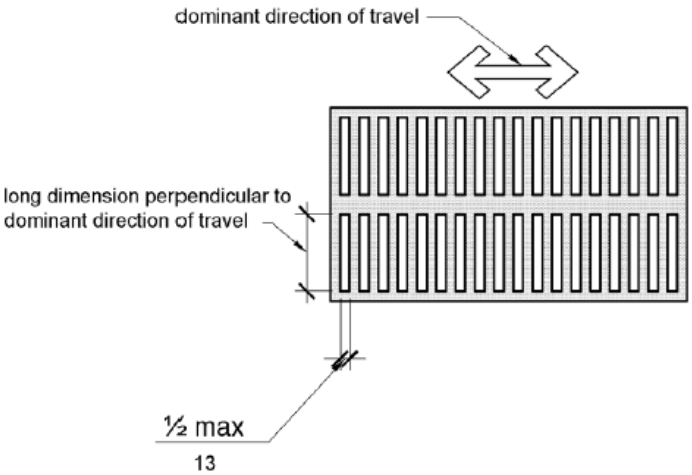
Grating